MODEL DESCRIPTION

MODEL #LA-310-SHP HOME PLATE WITH ANCHOR
MODEL #LA-300-AS PROFESSIONAL STYLE HOME PLATE
MODEL #LA-230-SP PLUGS FOR GROUND ANCHORS
MODEL #LA-175MLB COMPLETE SET OF 3 BASES
MODEL #LA-450-C1 4-WAY PITCHING RUBBER

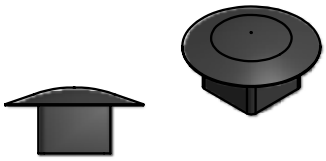

Model #LA-230-SP
Plugs for Ground Anchors

Molded, 1" plugs with domed cap, fits snuggly to keep elements out when bases are removed.

Model #LA-310-SHP
Home Plate w/Anchor

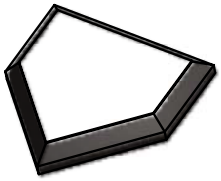

Model #LA-300-AS
Professional Style Home Plate

Base
Anchor

MAJOR LEAGUE BASES: (MODEL #LA-175MLB)
Stanchion pan attached to the bottom of the cover.
Stanchion length and anchor length is 5".

(Note: See detail specifications on sheet 3 of 3)

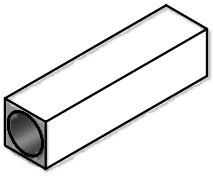

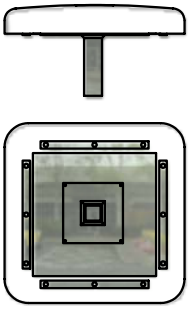

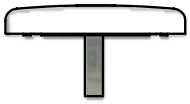

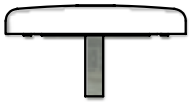

Model #LA-450-C1
4-Way Pitching Rubber

Model #LA-175MLB
complete Set of 3 Bases
& 3 Anchors

4-WAY PITCHER'S RUBBER: (MODEL #LA-450-C1)
1. Great for high schools, colleges, universities.
2. Metal spikes are not necessary with this pitcher's rubber.
3. Do not fill the inside with dirt.
4. Bury 3 sides, then when the top side needs to be replaced, just loosen the dirt and turn the pitcher's rubber for a new surface.

PROFESSIONAL STYLE HOME PLATE: (MODEL #LA-300-AS)
1. Metal spikes are not necessary with this home plate.
2. Bury plate up to beveled edge, and align one diagonal edge towards first base, and opposite diagonal edge towards third base.

THE MATERIAL USED FOR HOME PLATE ARE OF HIGH DURABILITY, MOLDED RUBBER CONSTRUCTION, WHITE, WITH BLACK BEVELED EDGES, AND DESIGNED FOR ALL SKILL LEVELS.

Steelcraft ELEMENTS FOR LIFE OUTSIDE® www.LASTEELCRAFT.com 1-800-371-2438	Date: 3-28-08	SPECIFICATION/INSTALLATION INSTRUCTIONS
	Rev: A011513	MAJOR LEAGUE BASEBALL BASES
	Drawn: AMC	MODEL NO. LA-310-SHP,LA-300-AS,LA-230-SP LA-175MLB,LA-450-C1
	Sheet: 1 of 5	

LOCATING ANCHORS FOR HOME PLATE & BASES:

Note: Any method of installing ground anchors, other than shown in these instructions, will create damage to the bases and the warranty will become void.

1. Excavate a 12" square hole, 5" below average ground level, square with inside < corner of diamond 7-1/2" from each of two base lines (See illustration 1).

2. Drive a 1-1/2" square wooden stake (not included), whose sides are parallel to and 6-3/4" from each of two base lines. Check vertical position of stake both ways with level or plumb bob to assure accuracy. Stake must be removed later, so do not set too firmly to allow easy withdrawal (See illustration 2). It is imperative that the stake be used to keep the anchor straight and to insure the concrete does not flow up inside the ground anchor tube, which in turn may not allow the base pan stanchion tube to fully seat into the anchor.

3. Slide ground anchor over stake. Press into soil so top of anchor is 1" below average ground level of playing field. Check with long straight edge to insure proper position. (See illustration 2)

4. Tamp a small amount of soil around base of square tube to prevent concrete from touching wooden stake or blocking hole below tube end, and maintain the 1" position mentioned in #3 above.

5. Mix and pour enough concrete to embed anchor up to within approximately 1-1/2" from top of tube. Allow concrete to harden completely before removal of stake. (See illustration 2)

6. After closing cap, dirt can be brushed over surface of concrete to within a few inches of tube opening. Base should always be flat on ground during play.

7. If ground anchor should become plugged with dirt at any time, it can be easily cleaned by driving a hollow tube or reasonably sharp 1" pipe into stanchion opening and withdrawing impacted dirt a little at a time.

The plate of the base is designed to be streamlined and low to the ground to allow the player to smoothly slide over the plate after the pad dislodges

SEE SHEETS 4 & 5 FOR ADDITIONAL INFORMATIO

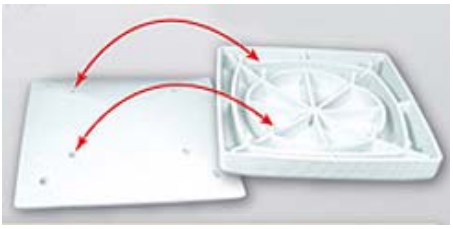

To reset the pad, the posts on the pad may simply be aligned with the holes in the plate & inserted.

Illustration 2

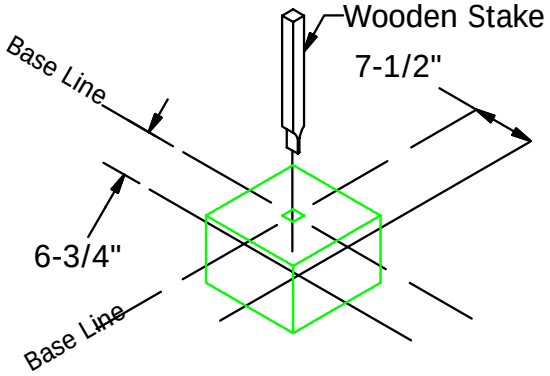

Illustration 1

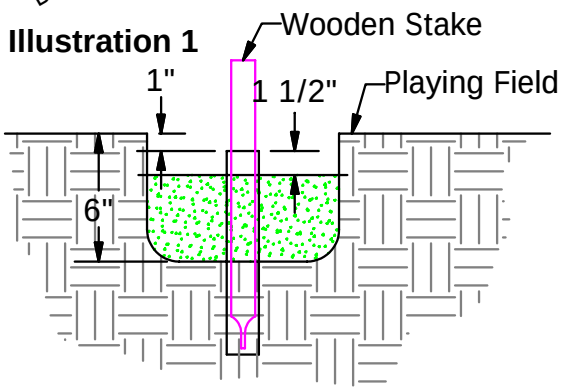

Model 8504-00 Dislodging Safety Base Set

Steelcraft L.A. ELEMENTS FOR LIFE OUTSIDE® www.LASTEELCRAFT.com 1-800-371-2438	Date: 3-28-08	SPECIFICATION/INSTALLATION INSTRUCTIONS
	Rev: SS81617	MAJOR LEAGUE BASEBALL BASES
	Drawn: AMC	MODEL NO. LA-310-SHP,LA-300-AS,LA-230-SP LA-175MLB,LA-450-C1
	Sheet: 2 of 5	

SPECIFICATION DETAILS

HEAVY GAUGE WHITE RUBBER COVER OVER HIGH DENSITY FOAM INTERIOR AND ALL WELDED STEEL STANCHION PAN.

BASES

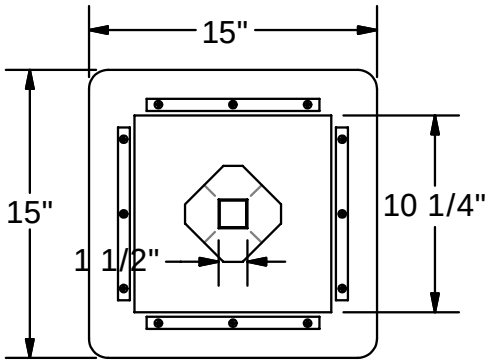

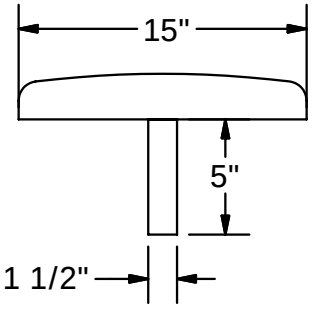

SOLID WOOD INNER CORE

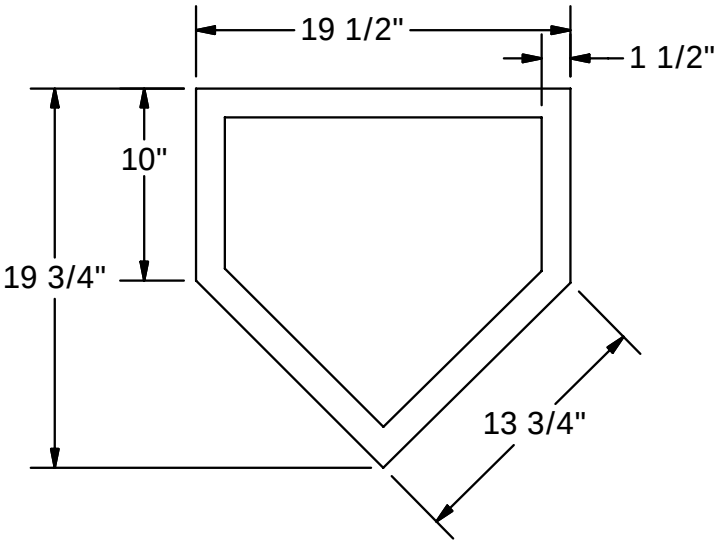

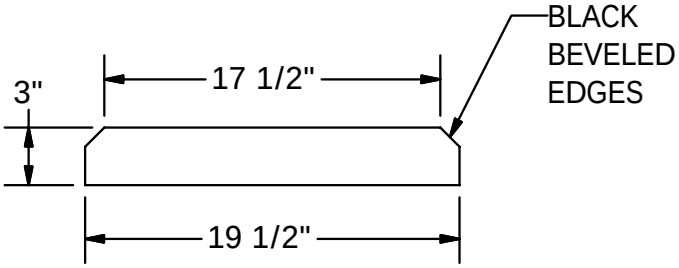

HOME PLATE

TOUGH RUBBER WITH INNER CORE.

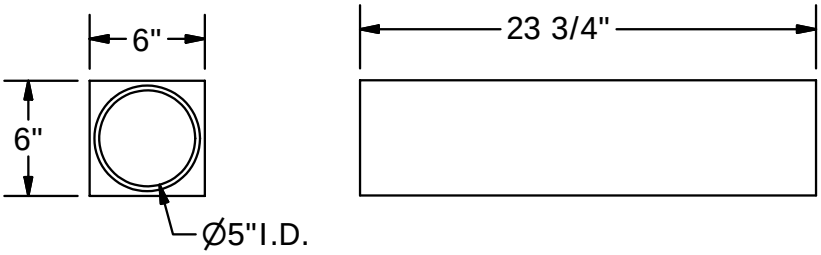

DESIGNED TO BE ROTATED PERIODICALLY FOR EXTENDED LIFE.

PITCHERS RUBBER

Steelcraft ELEMENTS FOR LIFE OUTSIDE® www.LASTEELCRAFT.com 1-800-371-2438	Date: 3-28-08	SPECIFICATION/INSTALLATION INSTRUCTIONS
	Rev: SS81617	MAJOR LEAGUE BASEBALL BASES
	Drawn: AMC	MODEL NO. LA-310-SHP,LA-300-AS,LA-230-SP LA-175MLB,LA-450-C1
	Sheet: 3 of 5	

BASE ASSEMBLY INSTRUCTIONS:

1. Place the wide end of the male post over the square hole of the base so that the post points toward the sky.

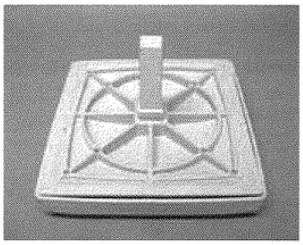

2. Press down firmly to insert wide end of the post into the square hole.

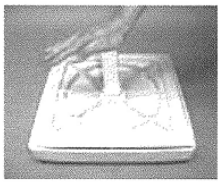

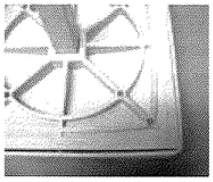

IF BASE RELEASES:

1. Place the base cover on the ground, upside down, so that the nipples face upward.

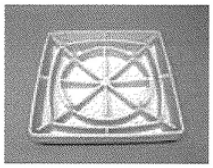

2. Pull the base plate and post out of the anchor (out of the ground).

3. Turn over the base plate and post.

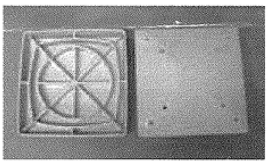

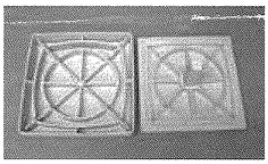

4. Place the base plate and post on top of the nipples, lining up the holes in the base plate to the nipples in the base cover.

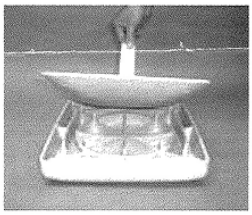

5. Press down firmly. (The base is properly attached when all four corner nipples are nearly flush with the under-side of the base plate and the inner most four nipples cannot be pushed in any further)

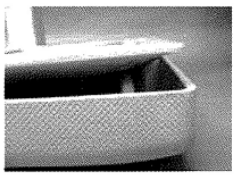

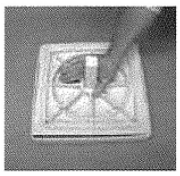

6. Replace fully assembled base cover, base plate and post into the ground anchor again before resuming play.

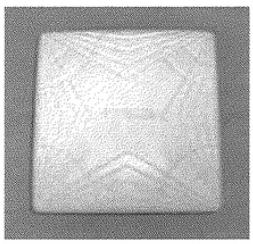

7. Make sure the base lays level on the ground.

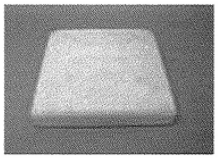

YOUTH DISLODGING BASE

Steelcraft ELEMENTS FOR LIFE OUTSIDE® www.LASTEELCRAFT.com 1-800-371-2438	Date: 3-28-08	SPECIFICATION/INSTALLATION INSTRUCTIONS
	Rev: SS81617	MAJOR LEAGUE BASEBALL BASES
	Drawn: AMC	MODEL NO. LA-310-SHP,LA-300-AS,LA-230-SP LA-175MLB,LA-450-C1
	Sheet: 4 of 5	

ANCHOR INSTALLATION INSTRUCTIONS:

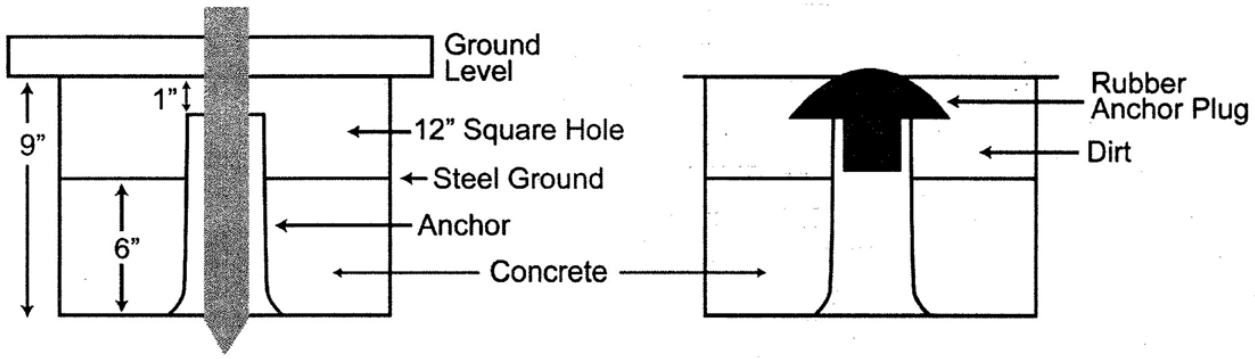

DURING INSTALLATION: AFTER COMPLETION:

1. Locate the base paths and lay out the field.

2. Install or mark position of home plate to first and third bases. Square bases with center line of field running from home plate through the center of the pitcher's rubber.

3. Measure the proper distance from first and third bases to second base. Straight lines of the proper length measured from each base will meet at the proper location for second base. This location should be in line with an extension of the straight line from home plate through the center of the pitcher's rubber.

4. Dig a 12" x 12" hole, 9" deep at each base location.

5. Drive a 1½" square wooden stake into the center of hole. This stake should be 6¾" inside each of the two base lines at the point of intersection. A level or a plumb bob should be used to check this. (The stake will be removed later so it should not be lodged too tightly in the ground.)

NOTE: IT IS IMPORTANT THAT A STAKE BE USED TO KEEP THE STEEL GROUND ANCHOR STRAIGHT AND PREVENT CONCRETE FROM SEEPING UP INSIDE THE GROUND ANCHOR. IF CONCRETE SEEPS INTO THE GROUND ANCHOR, THE BASE PAN STANCHION TUBE MAY NOT FIT COMPLETELY INTO THE ANCHOR AND THUS PROTRUDE ABOVE GROUND LEVEL.

6. Slide ground anchor over the stake with the anchor extensions at the bottom. Press the anchor into the soil until the top is 1" below the ground level of the area surrounding the base.

Stock: X-B072
Made in China by CHAMPRO Sports® T310
Division of Wilson Hunt International, Ltd., Skokie, IL 60076 USA

YOUTH DISLODGING BASE

Steelcraft ELEMENTS FOR LIFE OUTSIDE® www.LASTEELCRAFT.com 1-800-371-2438	Date: 3-28-08	SPECIFICATION/INSTALLATION INSTRUCTIONS
	Rev: SS81617	MAJOR LEAGUE BASEBALL BASES
	Drawn: AMC	MODEL NO. LA-310-SHP,LA-300-AS,LA-230-SP LA-175MLB,LA-450-C1
	Sheet: 5 of 5	